IoT based Marine Rack-Level Inventory Monitoring and Restocking Prediction using LoRa

A project report submitted in partial fulfilment of

the requirements for the degree of

Bachelor of Technology
in
Electronics and Computer Engineering

by

Ruptanay Pal (22BLC1388)

School of Electronics Engineering,

Vellore Institute of Technology, Chennai,

Vandalur–Kelambakkam Road, Chennai

– 600127, India.

April 2025

School of Electronics and Computer Engineering

Abstract

The increasing dependence on internet-based infrastructure for inventory management poses significant challenges in constrained and remote environments such as marine vessels, where reliable connectivity is often unavailable. This project presents the design and implementation of an offline marine inventory management and restocking prediction system utilizing a LoRa-based communication network to enable long-range, low-power data transmission within a shipboard environment.

The proposed system is structured into three primary components: distributed rack nodes, a centralized processing unit, and a portable handheld interface. Each rack node integrates an ESP32 microcontroller with a load cell sensor interfaced via an HX711 amplifier and a LoRa transceiver module, enabling continuous monitoring of inventory weight. These nodes periodically transmit sensor data to a central node built on a Raspberry Pi 5, which acts as the core data aggregation and processing unit. The central node maintains a local database of inventory readings and hosts a web-based dashboard over a local network, ensuring complete independence from external internet services.

The system incorporates real-time data acquisition and storage mechanisms, where incoming weight readings are logged into a structured database for further analysis . To enhance decision-making, a lightweight machine learning pipeline is deployed on the central node. Using linear regression, the system analyzes temporal weight trends to estimate depletion rates and predict the time remaining before restocking is required. Additionally, anomaly detection using an Isolation Forest model identifies irregular consumption patterns or sensor inconsistencies, improving system reliability and robustness . Forecasting techniques are further employed to predict short-term inventory levels, enabling proactive supply management.

A handheld ESP32-based device equipped with a LoRa module and OLED display allows personnel to query the central node and receive real-time inventory status and predictive insights from anywhere on the vessel. This ensures accessibility and operational efficiency without reliance on centralized displays.

The proposed solution addresses critical challenges in maritime logistics by providing a self-contained, scalable, and intelligent inventory monitoring system. By eliminating dependency on internet connectivity and leveraging low-power wireless communication, the system ensures reliable operation in isolated environments. Furthermore, the integration of predictive analytics enhances resource planning and reduces the risk of stock depletion, making it a practical and efficient solution for modern marine inventory management.

Codes and Standards

Project Title: *IoT based Marine Rack-Level Inventory Monitoring and Restocking Prediction using LoRa*

1. **Wireless Communication and Networking Standards •**

   LoRa Physical Layer (Semtech SX1278)

   Enables long-range, low-power communication between rack nodes, central node, and handheld device without reliance on internet infrastructure.

   • **IEEE 802.11 – Wi-Fi Standard**
   Used within the central node (Raspberry Pi 5) to host a local dashboard over LAN for onboard monitoring. • **TCP/IP and HTTP Protocols**
   Used for serving dashboard data and enabling communication between the central node and client devices over the ship's local network.

2. **Embedded Systems and Interface Standards • SPI**

   (Serial Peripheral Interface)

   Used for communication between ESP32 microcontroller and LoRa module (SX1278).

   - **I²C Communication Protocol**
     Used to interface the OLED display with the ESP32 in the handheld device.
   - **GPIO Digital Interface Standards**
     Used for interfacing sensors such as load cells and control signals in embedded modules.
   - **IEEE 1451 – Smart Transducer Interface**
     Provides a conceptual framework for integrating sensors (load cells) with microcontroller-based systems.

3. **Sensor and Measurement Standards • HX711 Load Cell**

   Amplifier Standard Interface

   Used for precise amplification and digitization of analog weight signals from load cells.

   - **ISO 9001 – Quality Management Systems**
     Ensures accuracy and reliability in measurement systems and calibration processes.
   - **OIML R60 – Load Cell Standards**
     Defines performance and accuracy requirements for load cell-based measurement systems.

4. **Data Processing and Machine Learning Standards •**

   Linear Regression Model (Supervised Learning)

   Used for trend analysis and prediction of inventory depletion based on weight variation over time. • **Isolation Forest Algorithm**

   Used for anomaly detection in sensor data to identify abnormal consumption patterns or sensor faults.

   - **Data Logging using SQLite Database**
     Lightweight database system used in the central node for efficient storage and retrieval of time-series sensor data.
   - **Python-based Data Processing Frameworks**
     Libraries such as NumPy and Scikit-learn are used for real-time analytics and prediction :contentReference[oaicite:0]index=0.

5. **Electrical and Power Standards • IEC 60364 – Electrical**

   Installation Standards

   Ensures safe deployment of electronic systems in marine environments.

   - **IEC 62133 – Battery Safety Standards**
     Governs the safe use of rechargeable batteries in handheld and rack units.
   - **DC-DC Conversion Standards (Buck Converter)**
     Used for efficient voltage regulation from battery sources to stable 5V/3.3V supply for embedded modules.

6. **System Architecture and Software Standards • Client-**

   Server Architecture

   Central node (Raspberry Pi 5) acts as a server while rack nodes and handheld devices act as clients.

   - **RESTful API Design Principles**
     Used for structured data access between backend services and dashboard interface.
   - **JSON Data Format**
     Used for lightweight serialization of sensor data transmitted over LoRa and HTTP.
   - **Real-Time Data Processing Systems**
     Ensures periodic data acquisition, logging, and prediction without dependence on cloud infrastructure.

Mapping of Sustainable Development Goals (SDGs)

Project Title: IoT based Marine Rack-Level Inventory Monitoring and Restocking Prediction using LoRa

Project Title	Mapped SDGs	Justification	Example Impact
IoT based Marine Rack-Level Inventory Monitoring and Restocking Prediction using LoRa	**SDG 9** – Industry, Innovation and Infrastructure	The system introduces an IoT-enabled smart inventory infrastructure using LoRa communication, enabling efficient and scalable monitoring in maritime environments.	Enhances digital transformation in marine logistics by enabling real-time, automated inventory tracking and predictive restocking.
	SDG 12 – Responsible Consumption and Production	Continuous monitoring of inventory levels reduces overstocking and wastage by enabling data-driven restocking decisions.	Minimizes resource wastage and ensures optimal utilization of stored goods on ships.
	SDG 13 – Climate Action	Optimized inventory management reduces unnecessary transportation and resupply operations, thereby lowering fuel consumption and emissions.	Contributes to reduced carbon footprint in marine logistics through efficient resource planning.
	SDG 14 – Life Below Water	By minimizing waste and preventing excess dumping of expired or unused goods, the system indirectly supports marine ecosystem protection.	Reduces potential marine pollution caused by improper disposal of inventory materials.

Continued on next page

(Continued from previous page)

Project Title	Mapped SDGs	Justification	Example Impact

	SDG 7 – Affordable and Clean Energy	The system uses low-power communication (LoRa) and energy-efficient embedded systems, making it suitable for long-term deployment with minimal energy consumption.	Enables sustainable operation of monitoring systems in energy-constrained marine environments.
	SDG 8 – Decent Work and Economic Growth	Automation of inventory monitoring reduces manual workload and human error, improving operational efficiency onboard ships.	Enhances productivity and reduces operational costs in maritime industries.

Note: The above SDGs highlight the contribution of the proposed system towards sustainable maritime operations, efficient resource utilization, and environmentally responsible practices.

Contents

Declaration Error! Bookmark not defined.

Certificate Error! Bookmark not defined.

Abstract 2

Acknowledgements Error! Bookmark not defined.

Codes and Standards iv

Mapping of Sustainable Development Goals (SDGs) vi

List of Figures xi

List of Tables xi

List of Acronyms xii

1 Introduction 1

1.1 Background and Motivation 1

1.2 System Overview and Approach 2

1.3 Problem Statement 2

1.4 Objectives 3

1.5 Scope of the Work 3

2 Literature Survey 5

2.1 Review of Prior Work 5

2.1.1 IoT-Based Inventory Monitoring Systems 6

2.1.2 Wireless Communication and Offline Systems 6

2.1.3 Prediction and Data Analysis in Inventory Systems 7

2.2 Gaps Identified 7

3 Methodology 9

3.1 System Architecture 9

3.1.1 Architecture Overview 10

3.1.2 Hardware / Software Components 11
3.1.2.1 Rack Unit (Sensor Node) 11
3.1.2.2 Central Node (Processing Unit) 12
3.1.2.3 Handheld Query Device 12
3.2 Process Workflow 14
3.3 Machine Learning Module 14
3.3.1 Linear Regression for Stock Prediction 14
3.3.2 Restocking Prediction 14
3.3.3 Anomaly Detection using Isolation Forest 15
3.3.4 Feature Engineering 15
3.4 Implementation Details 15
3.4.1 Hardware Implementation 15
3.4.2 Software Implementation 17

4 Results and Discussion **19**
4.1 Experimental Results 19
4.1.1 Handheld Device Communication Validation 19
4.1.2 Weight Trend Analysis 20
4.1.3 Forecasting Performance 21
4.1.4 Anomaly Detection Analysis 22
4.1.5 Performance Metrics 22
4.2 Discussion 23
4.2.1 Limitations 23
4.3 Conclusion 24

A Appendix **25**
A.1 Rack Unit Transmitter Code (ESP32 + LoRa + Load Cell) 25
A.2 Handheld Device Receiver Code (ESP32 + OLED + LoRa) 26
A.3 Central Node Code (Raspberry Pi – Python Backend) 27
A.4 Machine Learning Model Implementation 28
A.5 Hardware Schematics 29
A.5.1 Rack Unit Circuit 29
A.5.2 Handheld Device Circuit 30
A.5.3 Central Node Setup 30
A.6 Additional Implementation Details 31
Bibliography **32**

List of Figures

3.1 High-Level System Flow Showing Data Transmission and Prediction Response 9
3.2 Overall System Architecture of the Proposed System 10
3.3 Rack Unit Breadboard Implementation 11
3.4 Rack Unit Circuit Schematic 12
3.5 Handheld Device Breadboard Implementation 13
3.6 Handheld Device Circuit Schematic 13

4.1 Handheld Device Display Showing Received Inventory Data and Prediction 20
4.2 Weight Trend and Linear Regression Model 21
4.3 Short-Term Weight Forecasting using Linear Regression 21
4.4 Anomaly Detection using Isolation Forest 22

A.1 Rack Unit Circuit Implementation 29
A.2 Handheld Device Breadboard Circuit (ESP32 + OLED + LoRa) 30
A.3 Central Node (Raspberry Pi 5 8GB) 30

List of Tables

4.1 Performance Metrics of the Prediction Model 22

List of Acronyms

IoT Internet of Things

LoRa Long Range Communication

ESP32 Espressif 32-bit Microcontroller

HX711 24-bit ADC Load Cell Amplifier Module

ADC Analog to Digital Converter

SPI Serial Peripheral Interface

I2C Inter-Integrated Circuit

GPIO General Purpose Input Output

OLED Organic Light Emitting Diode

CPU Central Processing Unit

LAN Local Area Network

HTTP Hypertext Transfer Protocol

API Application Programming Interface **JSON**

JavaScript Object Notation

SQL Structured Query Language

ML Machine Learning

OLS Ordinary Least Squares

MAE Mean Absolute Error

R2 Coefficient of Determination

RF Radio Frequency **DC** Direct

Current

Chapter 1

Introduction

1.1 Background and Motivation

Efficient inventory management is a critical component of maritime operations, where ships operate in isolated environments with limited access to external resources. Unlike terrestrial supply chains, marine vessels must rely on pre-stocked inventory for extended durations, making accurate monitoring and timely restocking essential for uninterrupted operation. Traditional inventory management methods onboard ships often rely on manual inspection, periodic logging, or basic digital systems that lack real-time visibility and predictive capabilities.

These conventional approaches suffer from several limitations, including human error, delayed updates, lack of automation, and inability to anticipate inventory depletion. In dynamic environments such as marine logistics, where consumption patterns may vary based on operational conditions, crew size, and voyage duration, the absence of predictive systems can lead to either overstocking or critical shortages.

Recent advancements in the Internet of Things (IoT) and embedded systems have enabled the development of smart monitoring solutions that provide real-time data acquisition and analysis. However, most existing IoT-based systems depend heavily on continuous internet connectivity for data transmission and processing. This dependency makes them unsuitable for maritime environments, where network connectivity is often unreliable, intermittent, or completely unavailable.

To address these challenges, there is a need for an autonomous, low-power, and longrange communication system capable of operating independently of internet infrastructure. LoRa (Long Range) communication technology, combined with edge computing

and lightweight machine learning models, provides a promising solution for enabling realtime inventory monitoring and predictive analytics in such constrained environments.

1.2 System Overview and Approach

The proposed system, titled *"IoT based Marine Rack-Level Inventory Monitoring and Restocking Prediction using LoRa"*, is designed as a fully offline, distributed inventory management solution tailored for maritime applications. The system comprises three primary components:

- **Rack Units:** Each inventory rack is equipped with a load cell sensor interfaced with an HX711 amplifier and an ESP32 microcontroller. These units continuously measure the weight of stored items and transmit the data via LoRa communication.
- **Central Node:** A Raspberry Pi 5 acts as the central processing unit, receiving data from multiple rack nodes. It performs data logging, analysis, and prediction using lightweight machine learning models, and hosts a local web-based dashboard for monitoring.
- **Handheld Query Device:** A portable ESP32-based device with LoRa and OLED display allows users to query inventory status and receive restocking predictions from anywhere on the ship.

The system follows a hierarchical communication flow:

Rack Units → Central Node → Handheld Device

By leveraging LoRa technology, the system ensures reliable long-range communication with minimal power consumption, making it suitable for deployment across large ship environments without requiring internet connectivity.

1.3 Problem Statement

Existing inventory management systems in maritime environments are predominantly manual or rely on centralized digital systems that lack real-time monitoring and predictive capabilities. These systems face several key challenges:

- Absence of real-time inventory tracking at the rack level.

- Dependence on manual inspection, leading to inaccuracies and delays.

- Lack of predictive mechanisms to estimate restocking requirements.
- Dependence on internet connectivity for IoT-based solutions.
- Inefficient communication between distributed storage units and monitoring systems.

As a result, there is a significant need for a decentralized, intelligent, and offline-capable system that can monitor inventory in real time, analyze consumption patterns, and provide actionable insights for timely restocking decisions.

1.4 Objectives

The primary objectives of this project are as follows:

1. To design and develop an IoT-based rack-level inventory monitoring system using load cell sensors and ESP32 microcontrollers.
2. To implement long-range, low-power wireless communication using LoRa technology for reliable data transmission in marine environments.
3. To develop a central processing unit using Raspberry Pi 5 for data aggregation, storage, and analysis.
4. To implement machine learning-based prediction models for estimating inventory depletion and restocking time.
5. To design a handheld query device for real-time access to inventory status and predictions.
6. To create a local web-based dashboard for visualization and monitoring without dependence on internet connectivity.
7. To ensure energy-efficient and scalable system design suitable for deployment across multiple rack units.

1.5 Scope of the Work

This project focuses on the design, development, and implementation of a complete offline inventory monitoring and prediction system for marine environments. The scope of the work includes:

- Development of hardware modules including rack units, central node, and handheld device.
- Integration of load cell sensors for accurate weight-based inventory estimation.
- Implementation of LoRa-based communication for data exchange between system components.
- Development of software modules for data logging, visualization, and prediction.
- Implementation of machine learning algorithms for trend analysis and anomaly detection.
- Deployment of a local dashboard accessible over a LAN network.

The scope does not include cloud-based deployment, large-scale industrial validation, or integration with external supply chain management systems. The system is designed primarily for prototype-level validation and demonstration of feasibility in marine environments.

Chapter 2

Literature Survey

2.1 Review of Prior Work

Inventory management has evolved significantly with the adoption of Internet of Things (IoT) technologies. Modern systems aim to automate stock tracking and reduce dependency on manual processes, thereby improving efficiency and accuracy in managing resources.

One commonly used approach in inventory monitoring is weight-based measurement using load cells. These sensors, when paired with modules such as the HX711 amplifier, can provide accurate readings of the total weight of stored items. This method is particularly useful in cases where items are uniform, as it allows estimation of item count without the need for tagging each individual object. Compared to traditional methods, weight-based systems are simpler and more cost-effective.

Communication between sensing units and monitoring systems is another important aspect of such applications. Technologies like Wi-Fi and Bluetooth Low Energy (BLE) are widely used in IoT systems. BLE is efficient in terms of power consumption but is limited by its short communication range. Wi-Fi provides higher data rates but consumes more power and depends on network infrastructure.

LoRa (Long Range) communication has gained attention as a suitable alternative for applications requiring long-distance communication with low power usage. It allows reliable transmission of small data packets over large distances, making it useful in distributed systems where devices are spread across wide areas.

In addition to sensing and communication, many systems provide user interfaces such as web dashboards to display real-time data. These interfaces help users monitor system

status and make informed decisions. Some systems also include data logging mechanisms to store historical records for analysis.

More recently, there has been interest in incorporating predictive techniques into inventory systems. By analyzing past data, it is possible to identify usage patterns and estimate when stock levels will drop below a certain threshold. While advanced machine

learning models are often used for such tasks, they can be resource-intensive and may not be suitable for deployment on lightweight hardware.

Another important observation is that many existing solutions depend on cloud-based infrastructure. While cloud systems provide flexibility and processing power, they introduce dependency on internet connectivity, which may not be available in all environments.

2.1.1 IoT-Based Inventory Monitoring Systems

IoT-based inventory systems typically consist of sensor nodes, a communication layer, and a central processing unit. Sensors collect data such as weight or presence of items, which is then transmitted to a central system for processing.

RFID-based systems are commonly used for tracking individual items. Although they provide high accuracy, they require each item to be tagged, which increases cost and complexity. In contrast, weight-based systems offer a more practical solution when dealing with bulk storage of similar items.

By measuring the total weight of items in a container, these systems can estimate inventory levels without additional tagging mechanisms. This approach reduces hardware requirements and simplifies system design, making it suitable for scalable implementations.

2.1.2 Wireless Communication and Offline Systems

Wireless communication technologies are essential for connecting distributed components in IoT systems. The choice of communication method depends on factors such as range, power consumption, and data rate.

BLE is suitable for short-range applications, while Wi-Fi is useful when network infrastructure is available. However, both have limitations when applied to large or isolated environments.

LoRa provides a balance between range and power consumption, making it suitable for applications where devices are spread over a wide area and energy efficiency is important.

A major limitation in many existing systems is their reliance on internet connectivity. In environments such as ships or remote locations, stable internet access cannot be

guaranteed. This creates the need for systems that can operate entirely offline using local communication and processing.

2.1.3 Prediction and Data Analysis in Inventory Systems

Predictive analysis helps improve inventory management by estimating future stock levels based on past data. Simple models such as linear regression can be used to identify trends in consumption and predict when restocking will be required.

In addition, anomaly detection techniques can be used to identify unusual patterns, such as sudden drops in weight that may indicate errors or unexpected usage.

While these techniques are effective, many implementations rely on complex models that require significant computational resources. For embedded and edge-based systems, there is a need for lightweight methods that can run efficiently on limited hardware.

2.2 Gaps Identified

From the analysis of existing systems, the following gaps can be identified:

- Many systems depend on internet connectivity, making them unsuitable for environments where network access is limited or unavailable.
- Short-range communication technologies restrict system coverage and scalability in large deployments.
- RFID-based solutions increase cost and complexity due to the need for tagging individual items.
- Existing systems often do not provide continuous monitoring at the rack level, limiting visibility into real-time inventory status.
- Predictive features are either absent or implemented using computationally heavy models that are not suitable for edge devices.
- Integration of sensing, communication, processing, and user interaction is often fragmented rather than unified.
- Very few systems are designed specifically for constrained environments such as marine applications, where reliability and independence from external infrastructure are critical.

These limitations indicate the need for a system that is low-cost, scalable, energyefficient, and capable of operating without internet dependency. The proposed solution addresses these gaps by combining weight-based sensing, LoRa communication, edge processing, and lightweight prediction techniques into a single integrated system designed for marine environments.

Chapter 3

Methodology

3.1 System Architecture

The proposed system is designed as a distributed and offline-capable inventory monitoring framework specifically tailored for marine environments, where continuous internet connectivity cannot be guaranteed. The system is composed of three primary subsystems: rack-level sensing units, a central processing node, and a handheld query device.

To provide a clear understanding of the interaction between these components, a simplified system-level flow is presented in Figure 3.1.

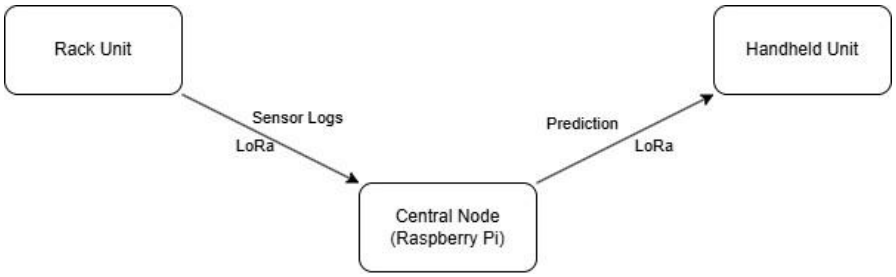

Figure 3.1: High-Level System Flow Showing Data Transmission and Prediction Response

As illustrated in the figure, the rack unit continuously collects weight data and transmits sensor logs to the central node using LoRa communication. The central node processes this incoming data, performs storage and predictive analysis, and generates meaningful insights such as restocking time. Upon request from the handheld device, the processed information and predictions are transmitted back via LoRa, enabling real-time decisionmaking for the user.

The complete architecture of the system, including internal modules and processing layers, is shown in Figure 3.2.

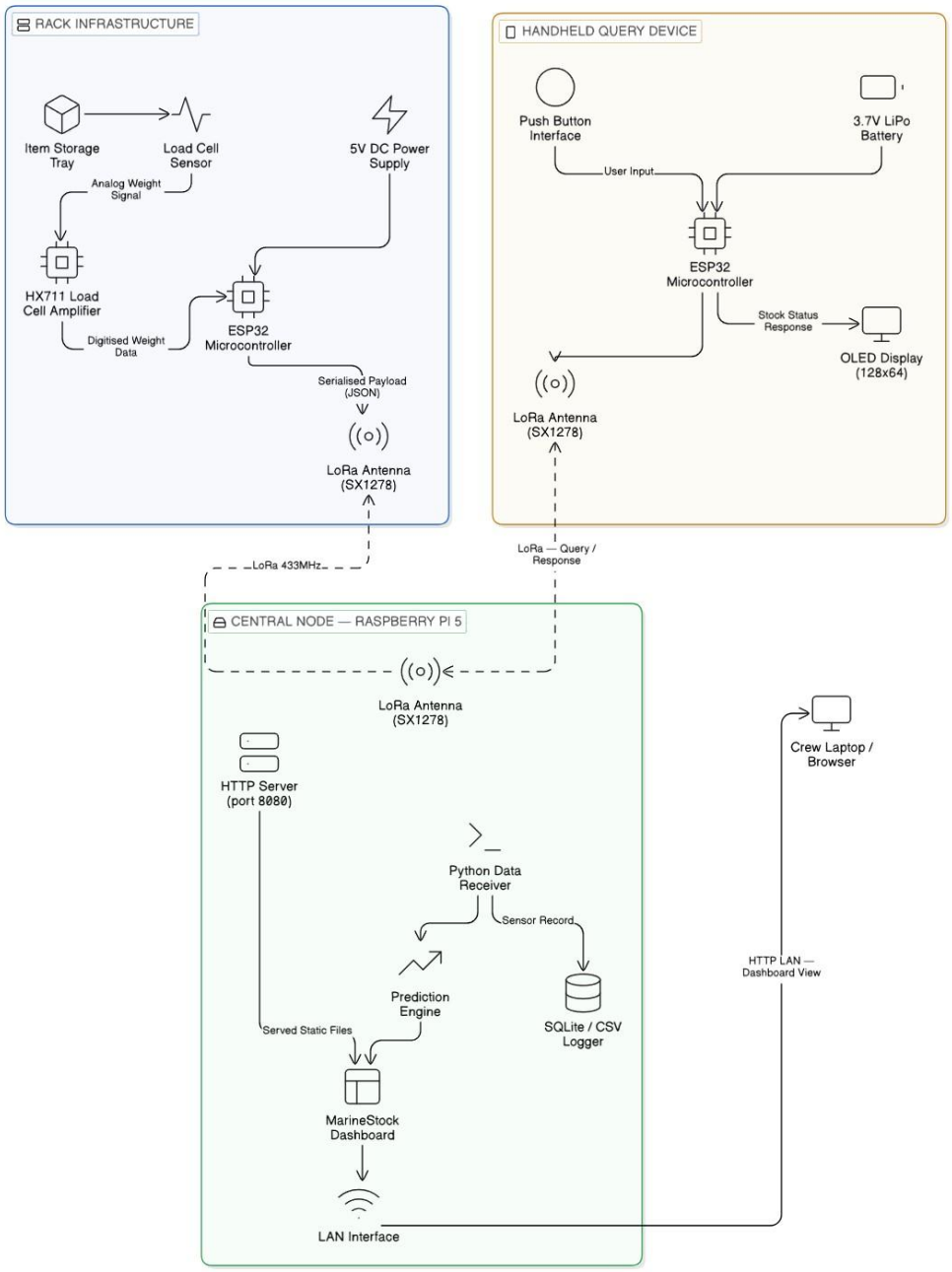

Figure 3.2: Overall System Architecture of the Proposed System

At the lowest level, rack units are deployed at individual storage locations to monitor inventory. These units continuously measure the weight of stored items and transmit the data to the central node. The central node acts as the core processing unit, while the handheld device provides a user-friendly interface for querying system data.

3.1.1 Architecture Overview

The system follows a hierarchical data flow model in which sensing, communication, and processing are distributed across different layers. The rack units act as edge sensing nodes

responsible for data acquisition, while the central node serves as the computational hub where data is processed and analyzed. The handheld device acts as the user interface for accessing system outputs.

This design ensures that the system remains fully functional even without internet connectivity. By performing all computations locally, the system eliminates dependency on cloud services and reduces latency. Additionally, the use of LoRa communication enables long-range connectivity with minimal power consumption, making it highly suitable for marine and remote environments.

3.1.2 Hardware / Software Components

3.1.2.1 Rack Unit (Sensor Node)

The rack unit is responsible for sensing and transmitting inventory data. It consists of an ESP32 microcontroller, a load cell sensor, an HX711 amplifier module, and a LoRa communication module.

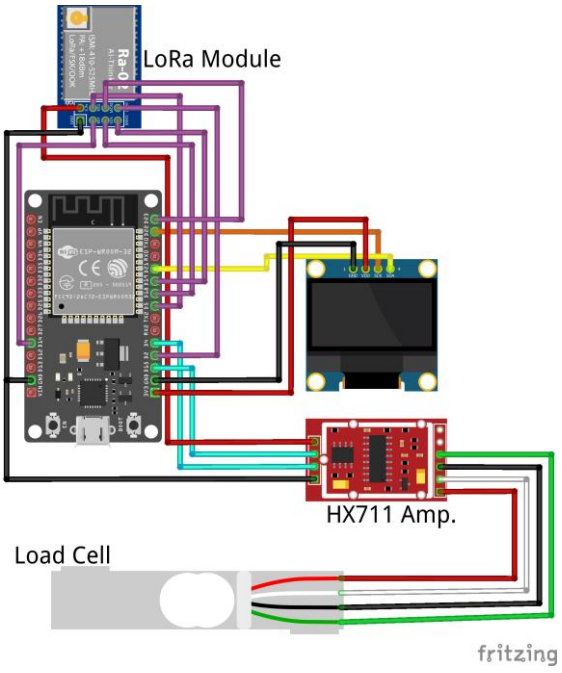

Figure 3.3: Rack Unit Breadboard Implementation

The load cell measures the weight of items placed on the rack. Since the output signal from the load cell is very small, the HX711 amplifier is used to amplify and convert it into a digital signal. The ESP32 reads this data, applies calibration, and computes the corresponding weight value.

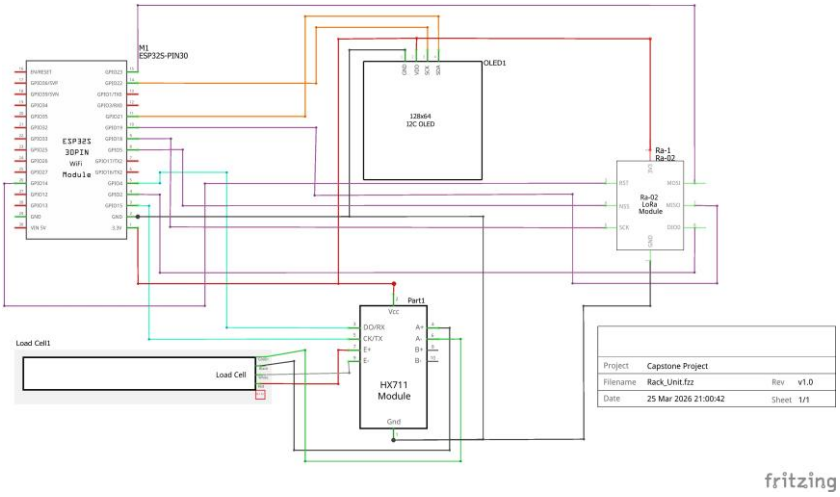

Figure 3.4: Rack Unit Circuit Schematic

The processed data is then formatted and transmitted using the LoRa module. The use of LoRa ensures reliable communication over long distances with low power consumption.

3.1.2.2 Central Node (Processing Unit)

The central node is implemented using a Raspberry Pi 5 and acts as the core processing unit of the system. It receives data from multiple rack units via LoRa communication and stores it in a local SQLite database along with timestamps.

In addition to data storage, the central node runs a Flask-based web server that provides a real-time dashboard. This dashboard displays inventory levels, trends, and predictions generated by the machine learning module.

3.1.2.3 Handheld Query Device

The handheld device provides a compact interface for accessing inventory data. It consists of an ESP32 microcontroller, a LoRa module, and an OLED display.

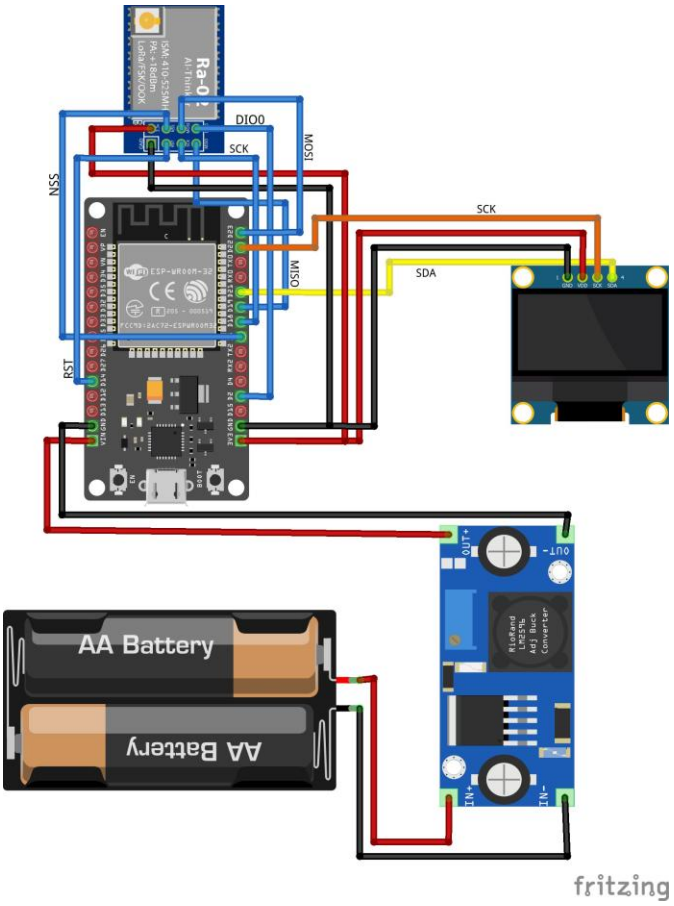

Figure 3.5: Handheld Device Breadboard Implementation

The device sends query requests to the central node and receives responses containing stock information and predictions. These results are displayed on the OLED screen for the user.

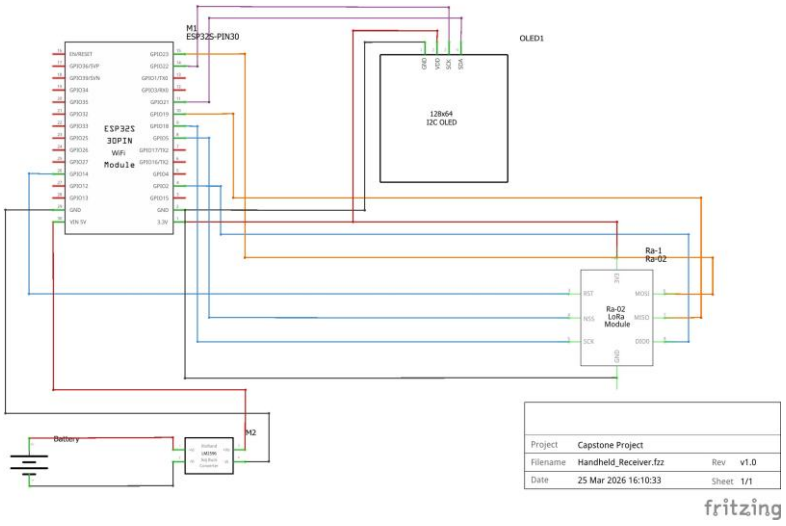

Figure 3.6: Handheld Device Circuit Schematic

3.2 Process Workflow

The system operates through a continuous cycle of sensing, transmission, processing, and response. Initially, the load cell measures the weight of inventory items. The HX711 module converts this analog signal into a digital value, which is processed by the ESP32 microcontroller.

The ESP32 transmits the processed data to the central node via LoRa. The central node stores the data, analyzes trends using machine learning models, and generates predictions. When a user sends a request through the handheld device, the central node responds with the latest inventory status and predicted restocking time.

3.3 Machine Learning Module

The machine learning module is responsible for converting raw sensor data into actionable insights. It performs two primary tasks: predicting stock depletion and detecting anomalies in sensor readings.

3.3.1 Linear Regression for Stock Prediction

The depletion of inventory is modeled using Ordinary Least Squares (OLS) linear regression:

$$W(t) = \beta_0 + \beta_1 t \tag{3.1}$$

where $W(t)$ represents the weight at time t, β_0 is the initial weight, and β_1 represents the rate of change of weight.

Since items are removed at a roughly constant rate, the weight decreases linearly over time. The slope β_1 directly represents the consumption rate.

3.3.2 Restocking Prediction

The restocking time is calculated by solving:

$$t_{restock} = \frac{W_{threshold} - \beta_0}{\beta_1} \tag{3.2}$$

This enables the system to estimate how much time remains before inventory reaches a critical level.

3.3.3 Anomaly Detection using Isolation Forest

An Isolation Forest algorithm is used to detect abnormal sensor readings. It analyzes both weight and rate of change:

$$\Delta W = W_t - W_{t-1} \tag{3.3}$$

Sudden spikes or drops are flagged as anomalies.

3.3.4 Feature Engineering

Raw timestamps are converted into elapsed time, and weight differences are computed. These features allow the model to capture both trends and sudden changes.

3.4 Implementation Details

The implementation of the proposed system involves careful integration of embedded hardware, wireless communication, power management, and software components. Each subsystem is configured and calibrated to ensure reliable operation under real-world conditions.

3.4.1 Hardware Implementation

The hardware design consists of sensor nodes (rack units), a central processing unit, and a handheld device. Each of these modules is optimized for low power consumption, reliability, and ease of deployment.

1. Load Cell and HX711 Calibration

The load cell is interfaced with the HX711 amplifier module, which converts the low-level analog signal into a digital value readable by the ESP32. Proper calibration is essential to ensure accurate weight measurement.

- Calibration is performed using known reference weights.

- A calibration factor is derived by comparing raw HX711 readings with actual weights.
- The system uses a scaling factor to convert ADC readings into grams.
- Multiple readings are averaged to reduce noise and improve stability.
- Zero-offset calibration is applied to eliminate baseline drift.

2. LoRa Communication Configuration

The LoRa modules (SX1278) are configured to achieve reliable long-range communication with minimal power consumption.

- Operating Frequency: 433 MHz
- Bandwidth: 125 kHz
- Spreading Factor: 7 (optimized for speed vs range trade-off)
- Coding Rate: 4/5
- Transmission Power: Configured to balance range and energy consumption
- Packet Structure: Lightweight payload containing weight and node ID
- Communication Mode: Half-duplex (query-response model)

These parameters are selected to ensure stable communication in a marine environment where obstacles and interference may be present.

3. Power System Design

The system is powered using a rechargeable lithium-ion battery pack and a buck converter for voltage regulation.

- Battery Configuration: Two 3.7V Li-ion cells connected in series (7.4V nominal)
- Buck Converter: LM2596 step-down converter
- Output Voltage: Regulated to 5V for ESP32 VIN input
- Efficiency: High efficiency switching regulation minimizes power loss

- Protection: Battery pack includes basic overcharge and discharge protection

The LM2596 converter ensures stable voltage output even as the battery voltage fluctuates during discharge.

4. ESP32 Configuration

The ESP32 microcontroller is used for both rack units and handheld devices due to its versatility and low power consumption.

- Communication Interfaces:
  - SPI for LoRa module
  - I2C for OLED display
- GPIO Pins configured for HX711 data acquisition
- Serial debugging used during development
- Firmware developed using Arduino IDE

5. OLED Display Integration

The handheld device uses a 128x64 I2C OLED display for output.

- Interface: I2C (SDA, SCL)
- Voltage: 3.3V compatible
- Displays:
  - Current stock level
  - Prediction results
  - Status messages

3.4.2 Software Implementation

The software architecture is divided into embedded firmware and central processing software.

1. Embedded Firmware (ESP32)

The ESP32 firmware handles sensor reading, processing, and communication.

- Reads weight data from HX711
- Applies calibration factor
- Converts weight to item count
- Formats data into compact payload
- Transmits data using LoRa

2. Central Node Software

The Raspberry Pi runs Python-based services for data handling and analytics.

- Data Reception: LoRa data parsing
- Storage: SQLite database (weight.db)
- Backend: Flask server for dashboard
- ML Module: Prediction and anomaly detection

3. Database Structure

The system uses a lightweight SQLite database to store sensor data.

- Fields:
  - Timestamp –

    Weight (grams)
- Ensures efficient local storage
- Enables historical analysis

4. System Optimization Considerations

Several optimizations are implemented to improve system performance:

- Reduced transmission frequency to save power

- Data filtering to remove noise
- Efficient data structures for fast processing
- Lightweight ML models for real-time execution

Chapter 4

Results and Discussion

4.1 Experimental Results

The proposed IoT-based inventory monitoring system was evaluated under controlled experimental conditions by simulating real-time inventory depletion. The system continuously recorded weight data from the load cell and transmitted it to the central node, where it was stored and processed using the implemented machine learning models.

The dataset used for evaluation consisted of approximately 3300 readings collected over a duration of nearly three hours. The weight values ranged from approximately 900 grams (initial stock) to 150 grams (near depletion), representing a realistic inventory usage scenario.

4.1.1 Handheld Device Communication Validation

To verify the successful end-to-end operation of the proposed system, the communication between the central node and the handheld device was tested under real-time conditions. The handheld device sends a query request to the central node using LoRa communication, and the central node responds with the processed inventory data and prediction results.

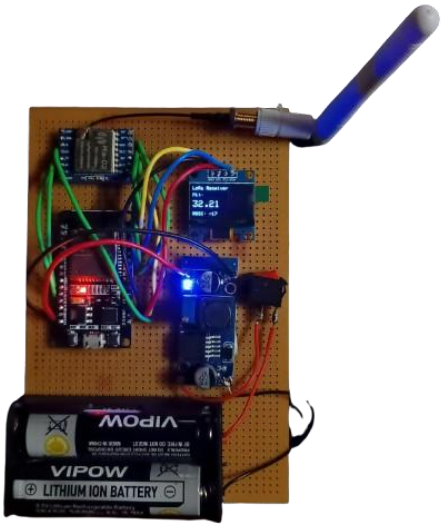

Figure 4.1: Handheld Device Display Showing Received Inventory Data and Prediction

As shown in Figure 4.1, the handheld device successfully receives the response packet from the central node and displays the relevant information on the OLED screen. The displayed data includes current stock level, predicted values, and system status.

The communication follows a request-response mechanism, where the handheld device initiates the process by transmitting a query packet. Upon receiving the request, the central node processes the latest data and sends a response packet containing the required information. This confirms that the LoRa-based bidirectional communication is functioning reliably.

The successful reception and display of data on the handheld device demonstrate that the system is capable of providing real-time inventory information to users without requiring access to the web dashboard. This feature is particularly useful in marine environments where quick and portable access to system data is essential.

4.1.2 Weight Trend Analysis

The overall trend of inventory depletion over time is illustrated in Figure 4.2. The graph shows the actual weight readings along with the linear regression model fitted to the data.

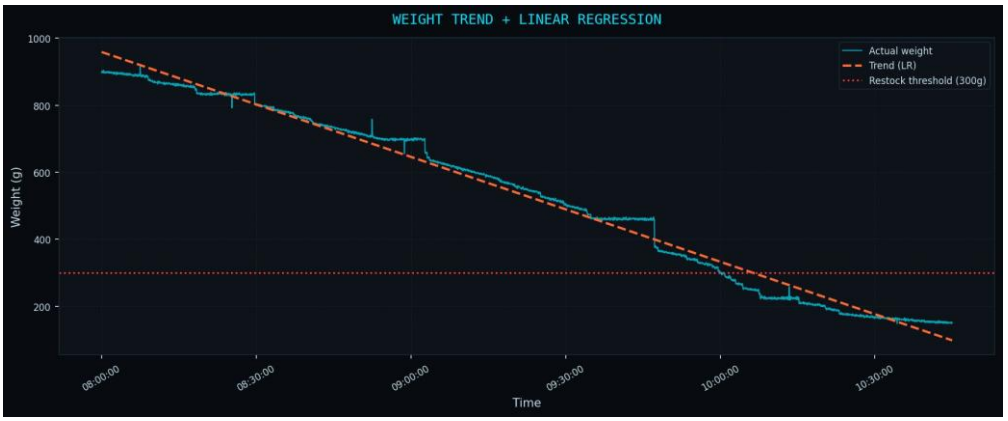

Figure 4.2: Weight Trend and Linear Regression Model

As observed from the figure, the weight decreases approximately linearly with time, validating the assumption used in the regression model. The fitted regression line closely follows the actual data, indicating that the model effectively captures the overall consumption pattern.

Minor deviations from the linear trend can be observed due to discrete removal of items and sensor noise. However, these variations do not significantly affect the overall prediction accuracy.

4.1.3 Forecasting Performance

The forecasting capability of the system is demonstrated in Figure 4.3, which shows predicted weight values at future time intervals.

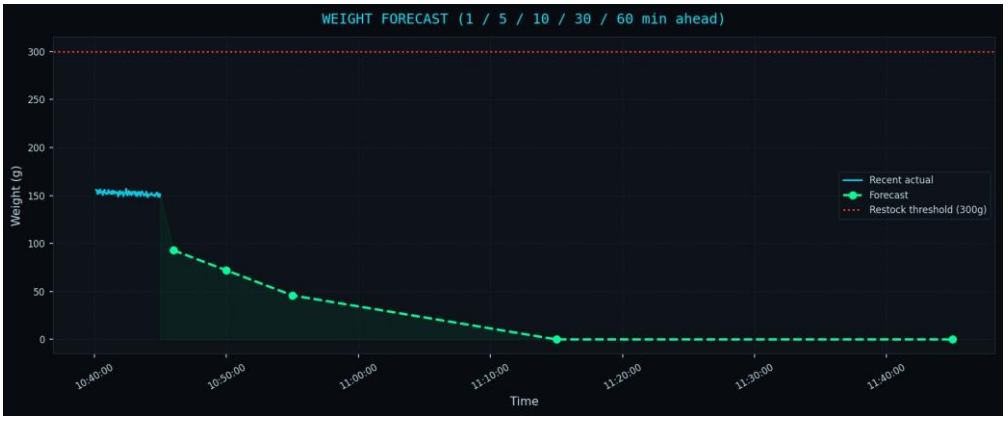

Figure 4.3: Short-Term Weight Forecasting using Linear Regression

The model predicts future weight values at intervals of 1, 5, 10, 30, and 60 minutes. The results show a smooth continuation of the decreasing trend, which aligns with the expected behavior of inventory consumption.

It is also observed that the predicted weight eventually approaches zero, which is physically constrained in implementation to avoid negative values. The forecasting results are particularly useful for estimating restocking time and planning inventory replenishment.

4.1.4 Anomaly Detection Analysis

The performance of the anomaly detection model is shown in Figure 4.4.

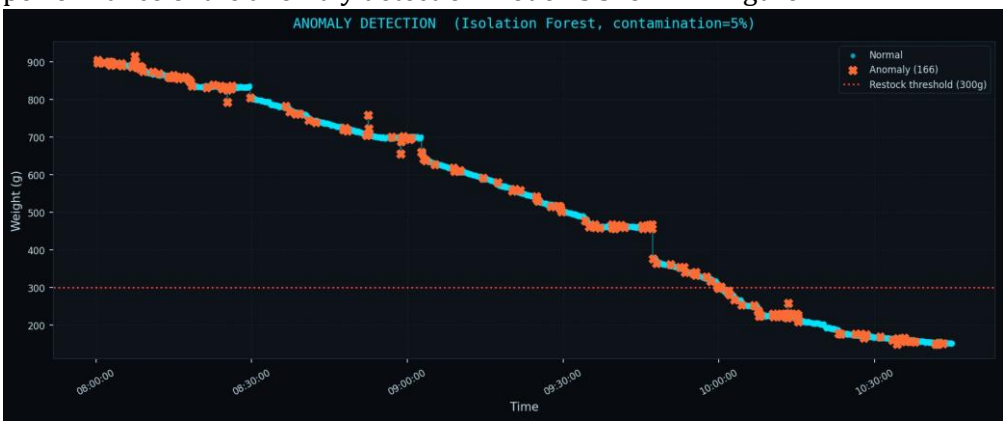

Figure 4.4: Anomaly Detection using Isolation Forest

The graph highlights normal readings and detected anomalies. The anomaly detection model successfully identifies sudden spikes and drops in weight values, which may occur due to external disturbances, sensor noise, or abrupt inventory changes.

Approximately 5% of the data points were classified as anomalies, consistent with the configured contamination parameter of the Isolation Forest model. The detected anomalies correspond to irregular patterns in the dataset, validating the effectiveness of the approach.

4.1.5 Performance Metrics

The performance of the prediction model was evaluated using standard regression metrics.

Table 4.1: Performance Metrics of the Prediction Model

Metric	Value
Mean Absolute Error (MAE)	~ 26 g
R-squared (R^2) Score	~ 0.99 (training)
Consumption Rate	~ 5.2 g/min

The low MAE value indicates that the model provides accurate predictions with minimal deviation from actual values. The high R^2 score for the training data confirms that the linear model effectively captures the trend in weight reduction.

4.2 Discussion

The results demonstrate that the proposed system successfully achieves its primary objectives of real-time monitoring, prediction, and anomaly detection.

The linear regression model proved to be highly effective for modeling inventory depletion, as the underlying process closely follows a linear trend. Unlike complex machine learning models, the chosen approach offers high interpretability and low computational overhead, making it suitable for edge deployment.

The anomaly detection module enhances system reliability by identifying irregular readings that could otherwise distort predictions. By incorporating both weight and rate-ofchange features, the system distinguishes between normal consumption and abnormal events.

One of the key advantages of the system is its offline capability. All computations, including prediction and anomaly detection, are performed locally on the Raspberry Pi, eliminating dependency on cloud infrastructure. This makes the system highly suitable for marine environments.

4.2.1 Limitations

Despite the successful implementation, certain limitations were identified:

- The linear regression model assumes constant consumption rate, which may not always hold in real-world scenarios.
- Prediction accuracy may reduce during irregular usage patterns.
- The anomaly detection model relies on a fixed contamination parameter.
- Environmental factors such as vibrations may affect sensor readings.

4.3 Conclusion

This chapter presented the experimental evaluation of the proposed IoT-based inventory monitoring system. The results demonstrate that the system effectively tracks inventory levels, predicts restocking requirements, and detects anomalies in real time.

The integration of lightweight machine learning models with embedded systems enables efficient and scalable operation without reliance on external infrastructure. The proposed system provides a practical solution for inventory management in constrained environments such as marine storage systems.

Future work may include the use of adaptive prediction models, improved anomaly detection techniques, and integration with additional sensors for enhanced reliability.

Appendix A

Appendix

This appendix contains the complete implementation details of the proposed system, including firmware code for embedded devices, backend scripts for the central node, and hardware schematics.

A.1 Rack Unit Transmitter Code (ESP32 + LoRa + Load Cell)

The rack unit continuously reads weight values from the load cell using the HX711

```
#include <SPI.h>
#include <LoRa.h>
#include "HX711.h"

#define     SS 5
#define     RST 14

#define     DIO0 2


#define     DOUT 4
#define     CLK 18


HX711 scale;

void setup() {
    Serial.begin(115200);

    scale.begin(DOUT, CLK);
    scale.set_scale(2280.f);                    // Calibration factor
```

amplifier and transmits the processed data to the central node via LoRa communication.

1

2

3

4

```
    scale.tare();

    LoRa.setPins(SS, RST, DIO0);

    if (!LoRa.begin(433E6)) {
        Serial.println("LoRa init failed!"); while (1);
    }
}

void loop() { float weight = scale.get_units();

    Serial.print("Weight: ");
    Serial.println(weight);

    LoRa.beginPacket();
    LoRa.print(weight); LoRa.endPacket();

    delay(2000);
}
```

Listing A.1: Rack Unit Transmitter Code (ESP32)

A.2 Handheld Device Receiver Code (ESP32 + OLED + LoRa)

The handheld device sends a query request and receives stock information from the central node. The received data is displayed on an OLED screen.

```
#include <SPI.h>
#include <LoRa.h>
#include <Wire.h>
#include <Adafruit_SSD1306.h>

#define SCREEN_WIDTH 128
#define SCREEN_HEIGHT 64

Adafruit_SSD1306 display(SCREEN_WIDTH, SCREEN_HEIGHT, &Wire, -1);

void setup() {
```

```
    Serial.begin(115200);

    if(!display.begin(SSD1306_SWITCHCAPVCC, 0x3C)) {
        Serial.println("OLED failed"); while(true);
    }

    display.clearDisplay();

    LoRa.begin(433E6);
}

void loop() {
    LoRa.beginPacket();
    LoRa.print("REQ"); LoRa.endPacket();

    int packetSize = LoRa.parsePacket();

    if (packetSize) { String incoming =
        "";

        while (LoRa.available()) { incoming +=
            (char)LoRa.read();
        }

        display.clearDisplay(); display.setCursor(0, 10);
        display.print("Stock:"); display.println(incoming);
        display.display();
    }

    delay(3000);
}
```

Listing A.2: Handheld Receiver Code (ESP32 + OLED)

A.3 Central Node Code (Raspberry Pi – Python Backend)

The central node receives LoRa data, logs it into a database, performs prediction and anomaly detection, and serves the dashboard.

```
import serial import sqlite3 from
datetime import datetime

ser = serial.Serial('/dev/ttyUSB0', 9600) conn =
sqlite3.connect("weight.db") cursor = conn.cursor()

while True: line = ser.readline().decode().strip()

    try:
        weight = float(line) timestamp =
        datetime.now()

        cursor.execute("INSERT INTO data VALUES (?, ?)", (timestamp, weight)) conn.commit()

        print("Logged:", weight)

    except: pass
```

Listing A.3: Central Node Data Receiver

A.4 Machine Learning Model Implementation

The system uses a combination of Linear Regression for prediction and Isolation Forest

```
from sklearn.linear_model import LinearRegression from
sklearn.ensemble import IsolationForest import numpy as np

# Linear Regression model =
LinearRegression() model.fit(X_train,
y_train)

future_pred = model.predict(X_future)

# Isolation Forest
```

for anomaly detection.

```
iso = IsolationForest(contamination=0.05) iso.fit(data)

anomalies = iso.predict(data)
```

Listing A.4: Prediction and Anomaly Detection

A.5 Hardware Schematics

The following figures show the circuit diagrams and hardware configurations used in the system.

A.5.1 Rack Unit Circuit

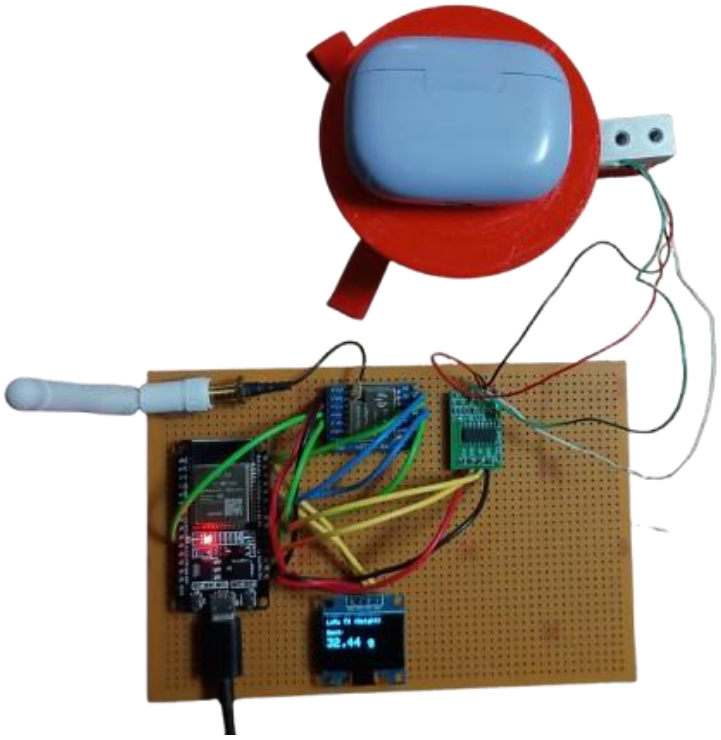

Figure A.1: Rack Unit Circuit Implementation

A.5.2 Handheld Device Circuit

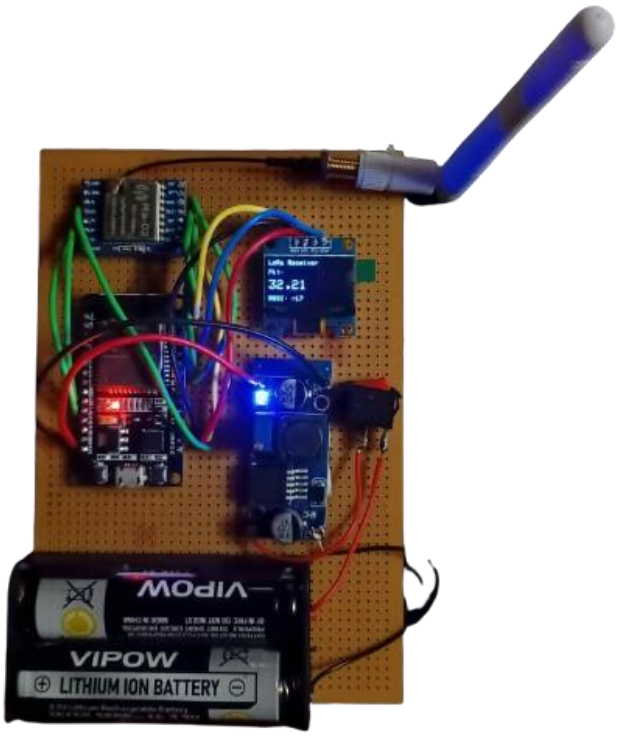

Figure A.2: Handheld Device Breadboard Circuit (ESP32 + OLED + LoRa)

A.5.3 Central Node Setup

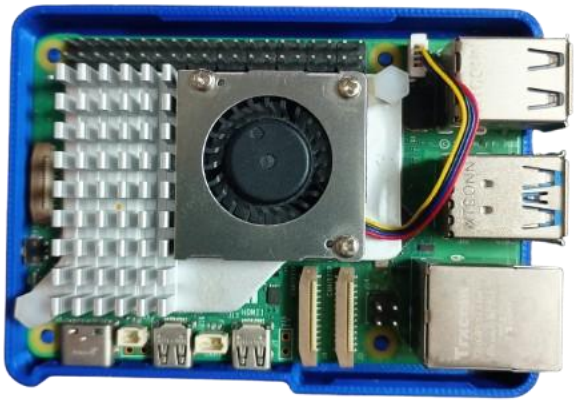

Figure A.3: Central Node (Raspberry Pi 5 8GB)

A.6 Additional Implementation Details

- **Operating Frequency:** 433 MHz LoRa communication
- **Battery Configuration:** 2 × 3.7V Li-ion (7.4V total)
- **Voltage Regulation:** LM2596 Buck Converter (stepped down to 5V)
- **Display Interface:** I2C OLED (128×64)
- **Sensor Interface:** HX711 ADC for load cell
- **Database:** SQLite for lightweight storage
- **Backend Framework:** Flask for dashboard hostin

Bibliography

[1] S. Winardi, N. P. Wong, A. Halim, S. Megawan *et al.*, "Enhancing warehouse inventory management through iot tools for monitoring stock items," in *2024 2nd International Conference on Technology Innovation and Its Applications (ICTIIA)*. IEEE, 2024, pp. 1–6.

[2] H. Kobayashi and H. Tamaki, "A method of ship scheduling and inventory management problem for reducing demurrage and freight," in *2017 IEEE International Conference on Systems, Man, and Cybernetics (SMC)*. IEEE, 2017, pp. 2790–2795.

[3] P. Hajek and M. Z. Abedin, "A profit function-maximizing inventory backorder prediction system using big data analytics," *Ieee Access*, vol. 8, pp. 58982–58994, 2020.

[4] R. R. Irshad, Z. Hussain, I. Hussain, S. Hussain, E. Asghar, I. M. Alwayle, K. M. Alalayah, A. Yousif, and A. Ali, "Enhancing cloud-based inventory management: A hybrid blockchain approach with generative adversarial network and elliptic curve diffie helman techniques," *IEEE Access*, vol. 12, pp. 25917–25932, 2024.

[5] R. M. Swaszek and C. G. Cassandras, "Receding horizon control for station inventory management in a bike-sharing system," *IEEE Transactions on Automation Science and Engineering*, vol. 17, no. 1, pp. 407–417, 2019.

[6] W. Chen, J. Childs, S. Ray, B. S. Lee, and T. Xia, "Rfid technology study for traffic signage inventory management application," *IEEE Transactions on Intelligent Transportation Systems*, vol. 23, no. 10, pp. 17809–17818, 2022.

[7] V. Surya, R. Tyagi, V. Rampally, V. Rajah, and S. Gonala, "Ai-powered inventory management system: Revolutionizing stock monitoring with real-time alerts & visual recognition," *International Journal of Innovative Science and Research Technology*, vol. 2025, no. 5, pp. 30–40, 2025.

[8] Q. Zhang, "Design and implementation of inventory system based on django and internet of things," in *2025 5th Asia-Pacific Conference on Communications Technology and Computer Science (ACCTCS)*. IEEE, 2025, pp. 1154–1158.

[9] A. C. Pamarthy, S. E. Mathe, S. Vappangi, S. Asma, K. M. Kiran, and N. Shyra, "Implementation of iot device for efficient communication using lora module for distinct applications," in *2023 International Conference on Next Generation Electronics (NEleX)*. IEEE, 2023, pp. 1–6.

[10] G. Manoharan, V. Kumar, A. Karthik, V. Asha, C. R. Mohan, and G. Nijhawan, "Iot-based smart inventory management system using machine learning techniques," in *2024 International Conference on Advances in Computing, Communication and Applied Informatics (ACCAI)*. IEEE, 2024, pp. 1–5.

[11] J. Li, H. Huang, Y. Gong, L. Wang, X. Yin, and Y. Liu, "A review of artificial intelligence in inventory management: Methods, applications and directions." *International Journal of Advanced Computer Science & Applications*, vol. 16, no. 10, 2025.

[12] V. Authors, "Iot-based smart inventory management systems: A review," *International Journal of Engineering Research*, 2022.

[13] A. A. Varshini and J. Murugachandravel, "Ai-powered inventory optimization with lgbmregressor," in *2025 International Conference on Engineering, Technology & Management (ICETM)*. IEEE, 2025, pp. 1–6.

[14] A. Huang, M. Huang, Z. Shao, X. Zhang, D. Wu, and C. Cao, "A practical marine wireless sensor network monitoring system based on lora and mqtt," in *2019 IEEE 2nd international conference on electronics technology (ICET)*. IEEE, 2019, pp. 330–334.

[15] R. Z. Thamrin, O. N. Samijayani, S. Rahmatia, D. Adrianto, and I. K. A. Enriko, "Implementation of lora end-device in sensor network system for indoor application," in *2020 IEEE International Conference on Communication, Networks and Satellite (Comnetsat)*. IEEE, 2020, pp. 208–212.

[16] L. Jun'e, Z. Xiaocui, and L. Bingwu, "The application of rfid technology in the inventory management," in *2010 2nd International Conference on Signal Processing Systems*, vol. 2. IEEE, 2010, pp. V2–817.

[17] F. T. Liu, K. M. Ting, and Z.-H. Zhou, "Isolation forest," in *2008 eighth ieee international conference on data mining*. IEEE, 2008, pp. 413–422.